KHA SLIM RIBBON

Performance Lighting





Slim area and site lighting series. Fixtures consist of:

- ¬ Multi-step powder-coat painting process, optimized against UV rays and corrosion.
- ¬ Copper-free aluminum extruded post.
- ¬ Copper-free precision die-cast aluminum housing and top cap.
- ¬ Corrosion-resistant AISI 316 stainless steel post and top cap.
- ¬ Satin UV-stabilized diffuser.
- ¬ Custom molded, anti-aging gasket(s).
- ¬ Stainless steel external hardware.
- ¬ Custom MCPCB utilized to maximize heat dissipation and promote long LED life.
- ¬ Diffuse light emission.
- ¬ IESNA Type V light distribution.
- ¬ Input voltage: 120-277 V (50 / 60 Hz), integral driver.
- ¬ Anchor bolts available for bollards (ordered separately).
- ¬ Suitable for most coastal applications (stainless steel versions).
- ¬ Five optional finishes available. Add finish suffix to any part number for textured Black (BK-81), Iron gray (AN-96), Aluminum metallic (GR-94), White (WH-87), Iron rust (RB-10) when not standard.
- ¬ Consult factory for dimming options, marine-grade, custom finishes (please specify RAL color), and non-cataloged CCT (Kelvin) options including static colors.
- ¬ Consult factory for custom post height options.
- ¬ 5-year warranty.
- ¬ Marine Grade finish.
- ¬ Suitable for Natatorium applications.

IP 66 | WET | UL LISTED | 1-10 V | RAL | IK 08 6 J

FINISHES

- **AN-96** / Iron gray / Textured
- **BK-81** / Black / Textured
- **INOX** / Stainless steel / Matt
- **GR-94** / Aluminum metallic / Textured
- **WH-87** / White / Textured
- **RB-10** / Iron rust / Textured

KHA SLIM RIBBON

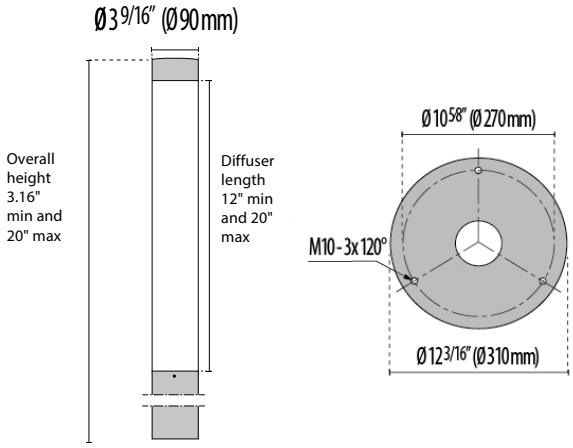

Lumen Output	Wattage	4K /80CRI
12" Diffuser	25W max	2595 lm
24" Diffuser	50W max	5190 lm
48" Diffuser	75W max	7800 lm

Contact factory for other CCT options and reduced lumen

Scan here for installation instructions

Performance in Lighting reserves the rights to make all necessary changes without prior notice.

Performance in Lighting - 2621 Keys Pointe - Conyers, Georgia 30013 - USA - voice 770.822.2115 - info.usa@pil.lighting
www.performanceinlighting.com

Rev. 09/12/2026

Order Guide - KHA SLIM RIBBON

Performance Lighting

Order code example	KHA-RBN-60-25W-3K-12-SS-UNV-010V-DB

Series	Column Height	Wattage	CCT	Diffuser Size	Finish	Voltage	Dimming	Options/ Accessories
KHA-RBN KHA SLIM RIBBON	**60** 60 Inch (12" Diffuser min) **72** 72 Inch (24" Diffuser min) **96** 96 Inch (48" Diffuser min) **XX** Specify height must be within range	**25W** 25 watt **40W** 40 watt **50W** 50 watt **75W** 75 watt **85W** 85 watt (30C/86f ambient max) **XX** Specify wattage must be within range	80 CRI std. **27K** 2700k **3K** 3000k **35K** 3500k **4K** 4000k **5K** 5000k **65K** 6500k **RED** Static Red **BLU** Static Blue **GRN** Static Green **AMB** Static Amber **RGBW** RGBW See below for control details	**12** 12" diffuser (25W max wattage) **24** 24" diffuser (50W max wattage) **48** 48" diffuser (85W max wattage) 48" is the max diffuser length	**SS** Stainless Steel (96" max OAH) **AM** Aluminum Metallic **IG** Iron Gray **IR** Iron Rust **BK** Textured Black **WH** Textured White **CC** Custom Color	**UNV** 120-277V	**010V** 0-10V Dimming Driver **ELV** 120V Line-Voltage Dimming Driver	**DB** Direct burial (Must specify DB depth)

CONSULT FACTORY FOR OTHER AVAILABLE OPTIONS NOT SHOWN ABOVE

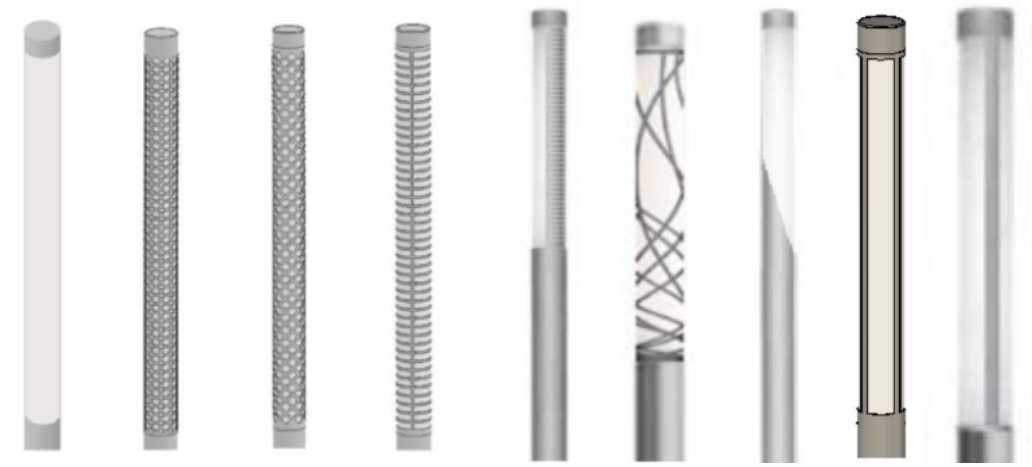

No Trim | Bubble Trim | Diamond Trim | Grill Trim | Perforated House Side Shield | Ribbon Trim | Angle Trim | 4-Line Trim | 2-Line Trim

Performance in Lighting reserves the rights to make all necessary changes without prior notice.

Performance in Lighting - 2621 Keys Pointe - Conyers, Georgia 30013 - USA - voice 770.822.2115 - info.usa@pil.lighting
www.performanceinlighting.com

Rev. 09/12/2026

Power Supply



17433
Kit driver 48V



17096
Kit driver 48V WP

RF Controls



3104173
RGBW RF controller 4 channel
(0.35A each CH)



31041730
RGBW RF controller WP 4 channel
(0.35A each CH)



310429
RGBW hand held remote

DMX Controls



178973
RGBW DMX enabler/decoder
4 channel (0.35A each CH)



1789730
RGBW DMX enabler/decoder WP
4 channel (0.35A each CH)



11015
Terminating Resistor



110150
Terminating Resistor WP